VALVE END VIEW

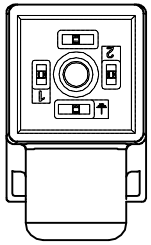

1 = BLACK #1
2 = BLACK #2
GND = GREEN/YELLOW

WIRING DIAGRAM

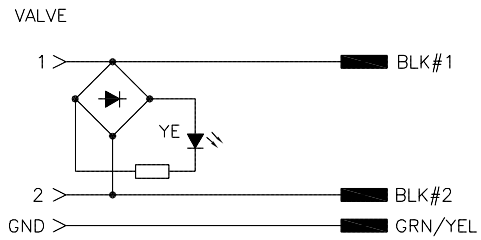

SPECIFICATIONS

CONTACT CARRIER MATERIAL	NYLON
MOLDED HEAD MATERIAL/COLOR	TPU/TRANSLUCENT BLACK
CONTACT MATERIAL/PLATING	BRASS/SILVER
RATED CURRENT [A]	4.0 A
RATED VOLTAGE [V]	110 VAC/VDC
OUTER CABLE JACKET MATERIAL/COLOR	TPU/GRAY
CONDUCTOR INSULATION MATERIAL	PVC
NUMBER OF CONDUCTORS [AWG]	3x18 AWG
TEMPERATURE RANGE	−40°C to +90°C (−40°F to +194°F)
PROTECTION CLASS	MEETS NEMA 1,3,4,6P AND IEC IP67

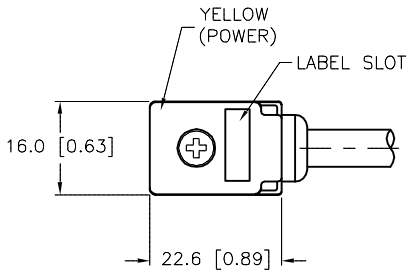

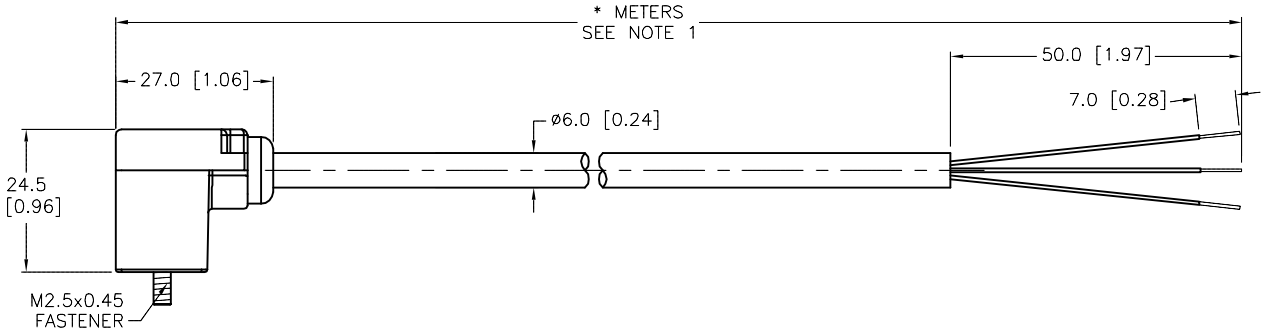

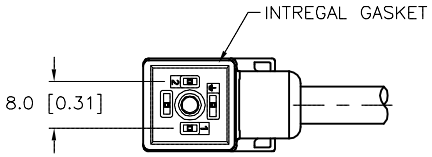

CABLE LENGTH	TOLERANCE *
ALL LENGTHS	+ 4% (OR 50mm) OF LENGTH − 0% (OR 0mm) OF LENGTH WHICHEVER IS GREATER
STRIP LENGTH	**TOLERANCE ***
0−7mm	±0.5mm
8−29mm	±1.0mm
30−49mm	±2.0mm
50−69mm	±3.0mm
70−100mm	±4.0mm
OVER 100mm	±5.0mm
* UNLESS OTHERWISE SPECIFIED	

SOURCE DRAWING - FOR REFERENCE ONLY

NOTES:

1. "*" INDICATES CABLE LENGTH IN METERS. CONTACT TURCK TO ORDER SPECIFIC LENGTHS.

REV	DESCRIPTION	BY	DATE	ECO NO.
C	UPDATE CABLE DIAMETER AND CABLE SPECS	RDS	05/06/14	44985

RELATED DOCUMENTS
1.
2.
3.
4.

3RD ANGLE PROJECTION

THIS DRAWING IS CONFIDENTIAL AND THE PROPERTY OF TURCK INC. USE OF THIS DOCUMENT WITHOUT WRITTEN PERMISSION IS PROHIBITED.

TURCK INC
High Technology Sensors and Automation Controls

3000 CAMPUS DRIVE
MINNEAPOLIS, MN 55441
1−800−544−7769
(763) 553−7300
(763) 553−0708 fax
turck.com

MATERIAL: SEE SPECIFICATIONS

FINISH: SEE SPECIFICATIONS

ALL DIMENSIONS DISPLAYED ON THIS DRAWING ARE FOR REFERENCE ONLY

CONTACT TURCK FOR MORE INFORMATION

DRFT: KMY | DATE: 04/25/13
APVD: A.A. | SCALE: 1=1.3

UNIT OF MEASUREMENT
MILLIMETER [INCH]
DO NOT SCALE THIS DRAWING

DESCRIPTION: TC8S 2−N669−*M

IDENTIFICATION NO.

REV: C

FILE: 777031536

SHEET 1 OF 1

Approved 05/09/2014, work order #56231 by T.S.